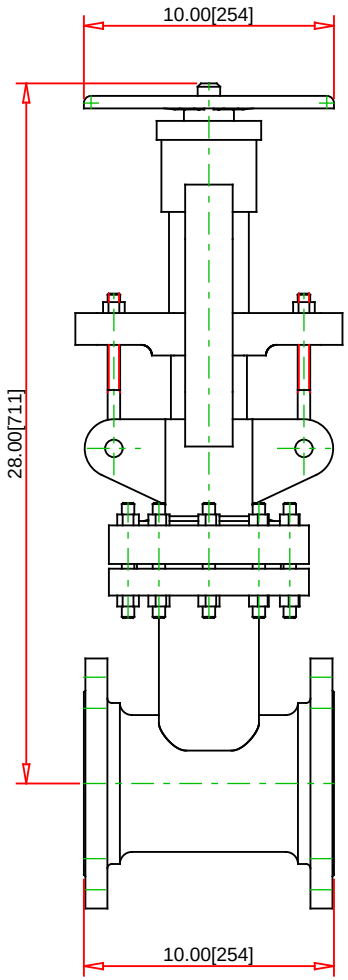

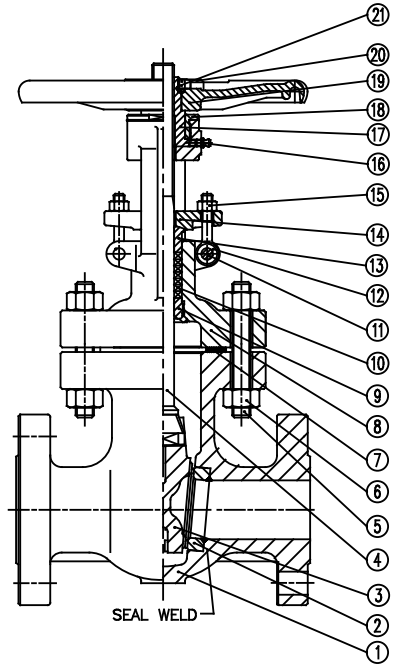

IT.	PART NAME	MATERIAL
1	BODY	A216 WCB
2	SEAT RING	A105 + STELLITE 6
3	WEDGE	A216 WCB + 13% CR.
4	STEM	A182 F6a
5	BONNET BOLT	A193 B7
6	BONNET NUT	A194 2H
7	GASKET	CORRUGATED GRAPHITE + S.S.
8	BONNET	A216 WCB
9	BACK SEAT	A182 F6a
10	PACKING	BONNEY FORGE ECO-SEAL
11	EYE BOLT PIN	A105
12	GLAND EYE BOLT	A193 B7
13	PACKING GLAND	A182 F6a
14	GLAND FLANGE	A216 WCB
15	EYE BOLT NUT	A194 2H
16	GREASE NIPPLE	STEEL
17	YOKE SLEEVE	A439 D2
18	SLEEVE NUT	A105
19	HANDWHEEL	DUCTILE IRON
20	HANDWHEEL NUT	A105
21	SET SCREW	STEEL
22	GASKET	SPIRAL WOUND GRAPHITE + S.S.
23	THRUST BEARING	STEEL
24	YOKE	A216 WCB
25	YOKE NUT	A194 2H
26	YOKE BOLT	A193 B7

SPECIFICATIONS	
Body/bonnet:	A217WC9
Trim:	N/A
API Trim #:	N/A
Options:	GRAPHITE
INDUSTRY STANDARDS	
Design:	API 600, ASME B16.34
P-T rating:	ASME B16.34
End connection:	ASME B16.10
Testing:	API 598
Marking/other:	MSS SP25

Note: The dimensions provided in the 3D models are for reference only and should not be used for engineering/design purposes, please contact Bonney Forge Product Engineering to obtain certified dimensions.

Note : - Drawing not to Scale
- Dimensions subject to change.

Part No. :

5" 1-11-RF WCB GATE LE

Description :

Gate Valves - Class 150

BONNEY FORGE
14496 CROGHAN PIKE
P.O. BOX 330
MOUNT UNION, PA
17066

THE BEST VALUE Price, Quality Service ALL THE TIME

GATE VALVE - BOLTED BONNET
O.S.&Y-INTEGRAL RF FLANGED ENDS
CLASS 150

© 19-APR-2024 BONNEY FORGE