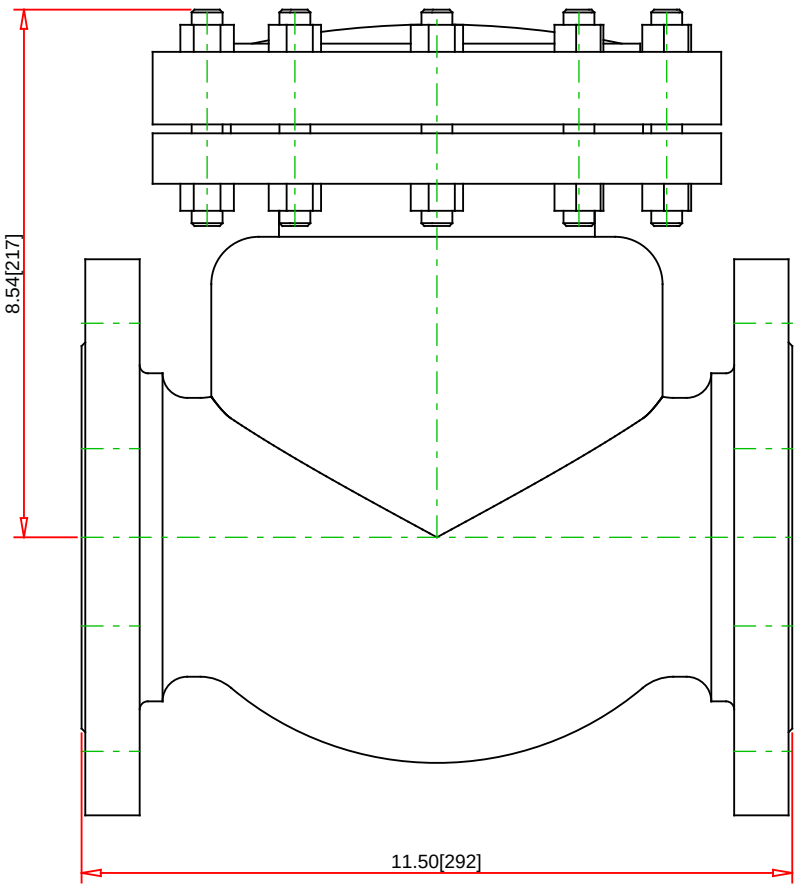

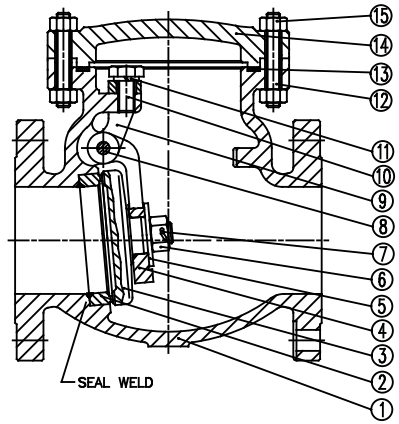

IT.	PART NAME	MATERIAL
1	BODY	A216 WCB
2	SEAT RING	A105 + STELLITE 6
3	DISC	A216 WCB + 13% CR.
4	HINGE	A216 WCB
5	WASHER	STEEL
6	DISC NUT	A182 304
7	PIN	A182 F321
8	HINGE PIN	A182 F6a
9	HINGE BRACKET	A216 WCB
10	HINGE BOLT	A182 F304
11	SPRING WASHER	ASTM A713
12	COVER BOLTS	A193 B7
13	GASKET	SPIRAL WOUND GRAPHITE + S.S.
14	COVER	A216 WCB
15	COVER NUT	A194 2H
16	EYE BOLT	A105

SPECIFICATIONS	
Body/bonnet:	N/A
Trim:	N/A
API Trim #:	N/A
Options:	GRAPHITE
INDUSTRY STANDARDS	
Design:	ASME B16.34
P-T rating:	ASME B16.34
End connection:	ASME B16.10
Testing:	API 598
Marking/other:	MSS SP25

Note: The dimensions provided in the 3D models are for reference only and should not be used for engineering/design purposes, please contact Bonney Forge Product Engineering to obtain certified dimensions.

Note : - Drawing not to Scale
- Dimensions subject to change.

Part No. :

4" 1-61-RF WCB SWING CHECK

Description :

Check Valves - Class 150

BONNEY FORGE
14496 CROGHAN PIKE
P.O. BOX 330
MOUNT UNION, PA
17066

THE BEST VALUE Price, Quality Service ALL THE TIME

SWING CHECK VALVE - BOLTED BONNET
INTEGRAL RF FLANGED ENDS
CLASS 150

© 19-APR-2024 BONNEY FORGE