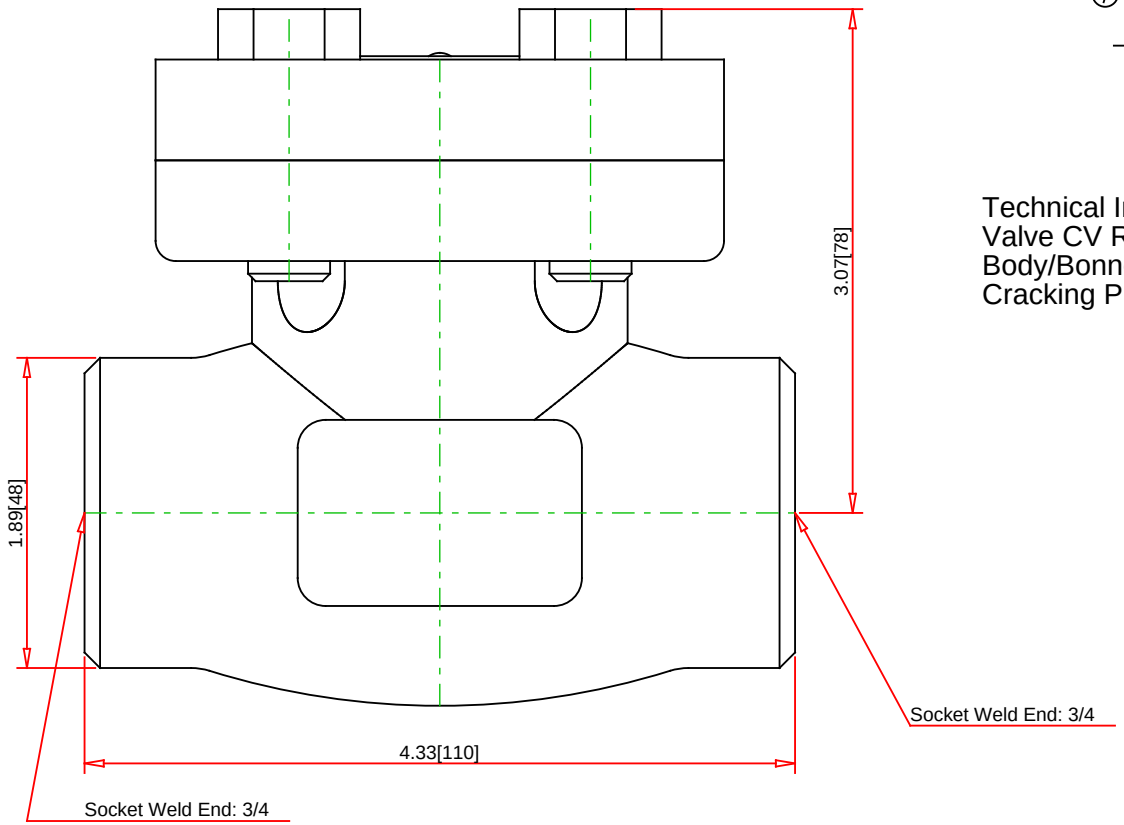

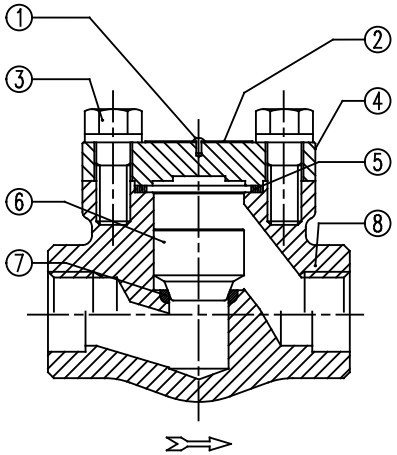

Technical Information:
Valve CV Rating: 4.1 [-]
Body/Bonnet Bolt Torques: 20 [ft.-lbs.]
Cracking Pressure: 0.261 [PSI]

IT.	PART NAME	MATERIAL
1	RIVET	STAINLESS STEEL
2	NAMEPLATE	ALUMINUM
3	BONNET	A105N
4	GASKET	F316L + GRAPHITE
5	BOLTS	A193 B7
6	SPRING	A313 TP316
7	PISTON	A479 410
8	INTEGRAL SEAT	STELLITE 6
9	BODY	A105N

SPECIFICATIONS	
Body/bonnet:	A 105
Trim:	F6/HF
API Trim #:	8
Options:	GRAPHITE
INDUSTRY STANDARDS	
Design:	ASME B16.34 - BS 5352
P-T rating:	ASME B16.34
End connection:	ASME B16.11, ASME B16.11
Testing:	API 598
Marking/other:	MSS SP25

Note: The dimensions provided in the 3D models are for reference only and should not be used for engineering/design purposes, please contact Bonney Forge Product Engineering to obtain certified dimensions.

Note : - Drawing not to Scale
- Dimensions subject to change.

Part No. :

3/4" HL-41-SW PISTON

Description :

Check Valves- Bolted Bonnet- Full & Standard Port

BONNEY FORGE
14496 CROGHAN PIKE
P.O. BOX 330
MOUNT UNION, PA
17066

THE BEST VALUE Price, Quality Service ALL THE TIME

PISTON CHECK VALVE - BOLTED BONNET
SOCKET WELD ENDS
CLASS 800 - FULL BORE

© 19-APR-2024 BONNEY FORGE