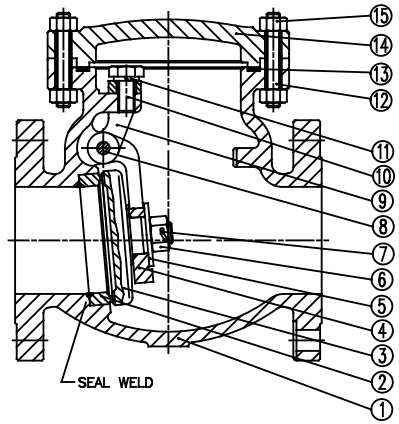


| IT. | PART NAME | MATERIAL |
|---|---|---|
| 1 | BODY | A216 WCB |
| 2 | SEAT RING | A105 + STELLITE 6 |
| 3 | DISC | A216 WCB + 316 |
| 4 | HINGE | A216 WCB |
| 5 | WASHER | STEEL |
| 6 | DISC NUT | A182 304 |
| 7 | PIN | A182 F321 |
| 8 | HINGE PIN | A182 F316 |
| 9 | HINGE BRACKET | A216 WCB |
| 10 | HINGE BOLT | A182 F304 |
| 11 | SPRING WASHER | ASTM A713 |
| 12 | COVER BOLTS | A193 B7 |
| 13 | GASKET | SPIRAL WOUND GRAPHITE + S.S. |
| 14 | COVER | A216 WCB |
| 15 | COVER NUT | A194 2H |
| 16 | EYE BOLT | A105 |

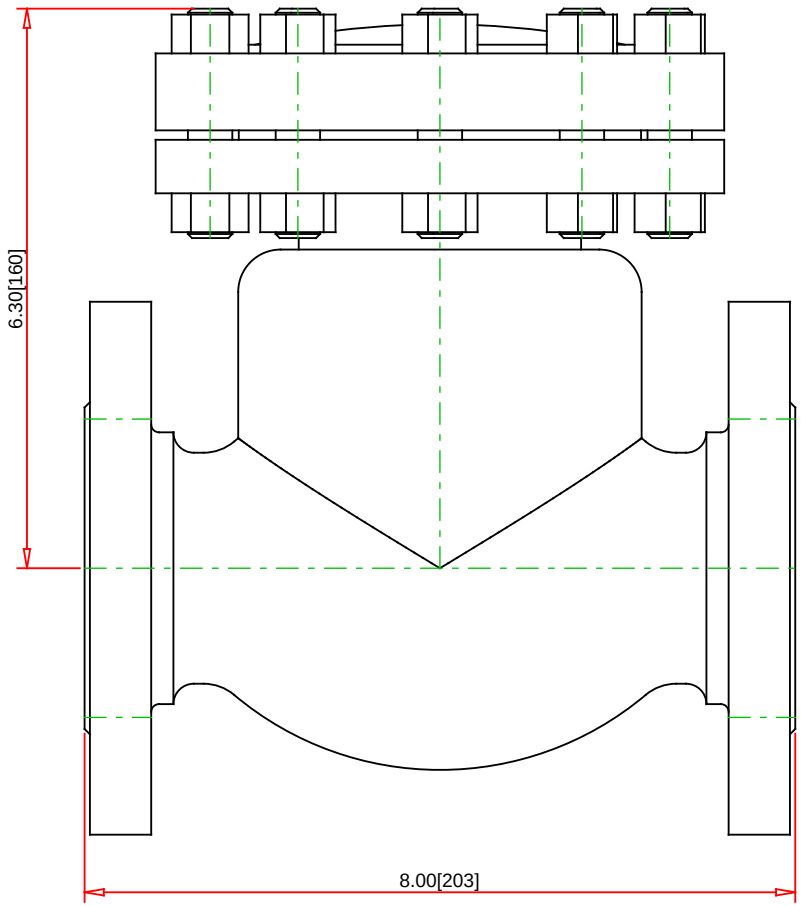


| SPECIFICATIONS | |
|---|---|
| Body/bonnet: | A216WCB |
| Trim: | F6/CA15 |
| API Trim #: | 1 |
| Options: | GRAPHITE |
| **INDUSTRY STANDARDS** | |
| Design: | ASME B16.34 |
| P-T rating: | ASME B16.34 |
| End connection: | ASME B16.10 |
| Testing: | API 598 |
| Marking/other: | MSS SP25 |

Note: The dimensions provided in the 3D models are for reference only and should not be used for engineering/design purposes, please contact Bonney Forge Product Engineering to obtain certified dimensions.

Note : - Drawing not to Scale
- Dimensions subject to change.

Part No. :

2" 1-63-RF WCB/T#12 SWING NACE

Description :

Check Valves - Class 150

BONNEY FORGE
14496 CROGHAN PIKE
P.O. BOX 330
MOUNT UNION, PA
17066

THE BEST VALUE Price, Quality Service ALL THE TIME

SWING CHECK VALVE - BOLTED BONNET
INTEGRAL RF FLANGED ENDS
CLASS 150

© 19-APR-2024 BONNEY FORGE